THIS SOURCE DESCRIBES OPEN HARDWARE AND IS LICENSED AS STATED ON THE COVER

M.2 Dual Key A+E Card with Mosaic-G5 GNSS Module

Low-power multi-band multi-constellation GNSS receiver

mosaic-G5

PROJECT: G5Dot

VARIANT: Mosaic-G5 P3H

CHANGE LOG

FAB-REV.	ASM-REV.	DESCRIPTION	DATE	APPROVED
01	01	Inital Release	25.04.2025	Valaenthin T.

VARIANTS
Mosaic-G5 P1
Mosaic-G5 P3
Mosaic-G5 P3H

© 2025 ANavS GmbH

This source describes Open Hardware and is licensed under the CERN-OHL-P v2.

You may redistribute and modify this documentation and make products using it under the terms of the CERN-OHL-P v2 (https:/cern.ch/cern-ohl). This documentation is distributed WITHOUT ANY EXPRESS OR IMPLIED WARRANTY, INCLUDING OF MERCHANTABILITY, SATISFACTORY QUALITY AND FITNESS FOR A PARTICULAR PURPOSE. Please see the CERN-OHL-P v2 for applicable conditions.

UF1

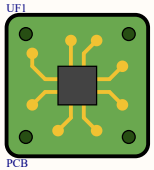

PCB
G5Dot_REV_01

Variant: Mosaic-G5 P3H

APPROVALS		DATE
ENG:	E. Daporta	17.04.2025
DSN:	E. Daporta	23.04.2025
CHK:	V. Tratter	25.04.2025

PROJECT: G5Dot
VARIANT: Mosaic-G5 P3H
TITLE: Cover_Page

Septentrio Interleuvenlaan 15i
3001 Leuven Belgium

SIZE	FILE NAME	FAB-REV	ASM-REV
A3	Cover_Page.SchDoc	01	01
SCALE n.a.	EXPORT DATE 15/04/2026	SHEET 1	OF 3

THIS SOURCE DESCRIBES OPEN HARDWARE AND
IS LICENSED AS STATED ON THE COVER

M.2 Dual Key A+E Edge Connector

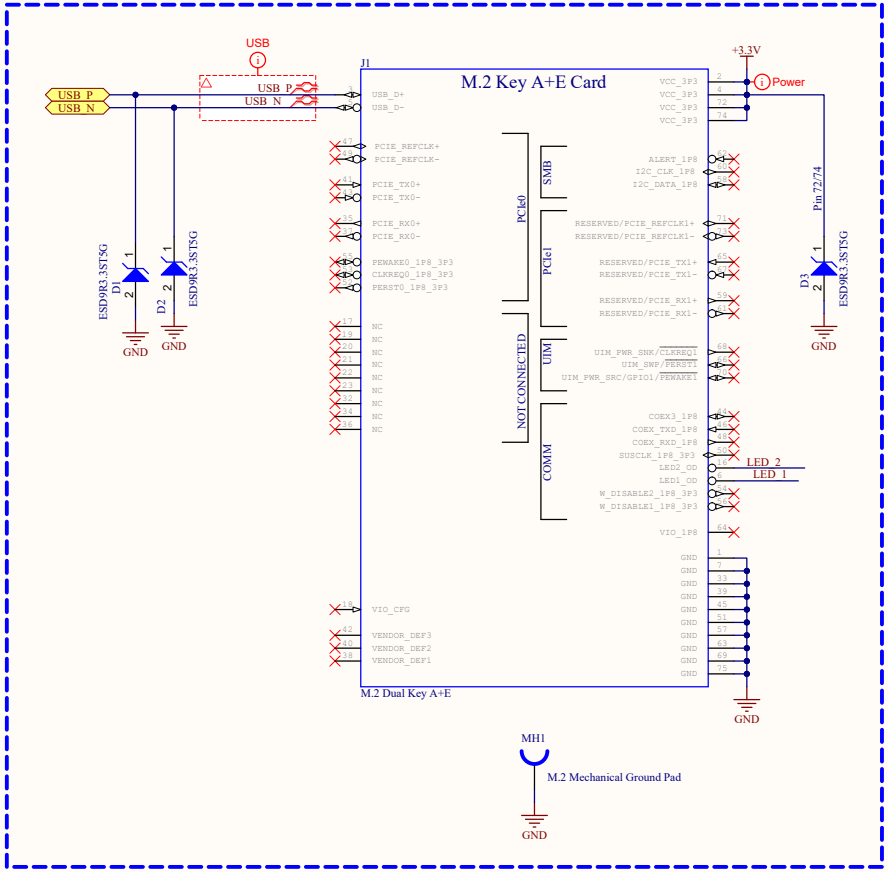

External LED + ESD protection

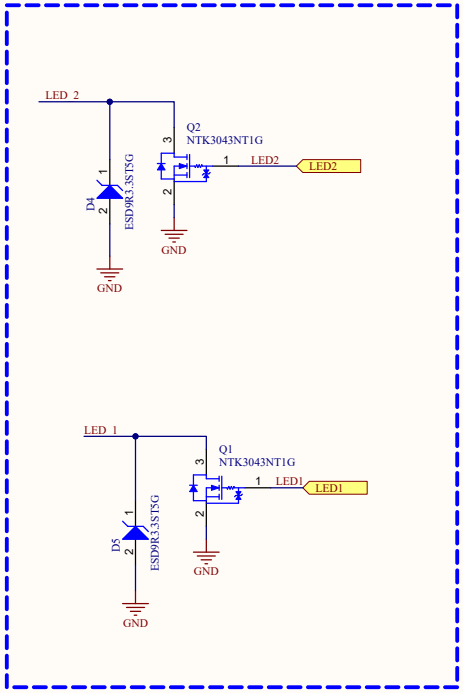

APPROVALS	DATE
ENG: E. Daporta	17.04.2025
DSN: E. Daporta	23.04.2025
CHK: V. Tratter	25.04.2025

PROJECT: G5Dot
VARIANT: Mosaic-G5 P3H

septentrio part of HEXAGON

TITLE: M.2_Key_A+E

Septentrio Interleuvenlaan 15i
3001 Leuven Belgium

SIZE	FILE NAME	FAB-REV	ASM-REV
A3	M.2_Key_A+E.SchDoc	01	01
SCALE n.a.	EXPORT DATE 15/04/2026	SHEET 2	OF 3

THIS SOURCE DESCRIBES OPEN HARDWARE AND
IS LICENSED AS STATED ON THE COVER

Mosaic-G5

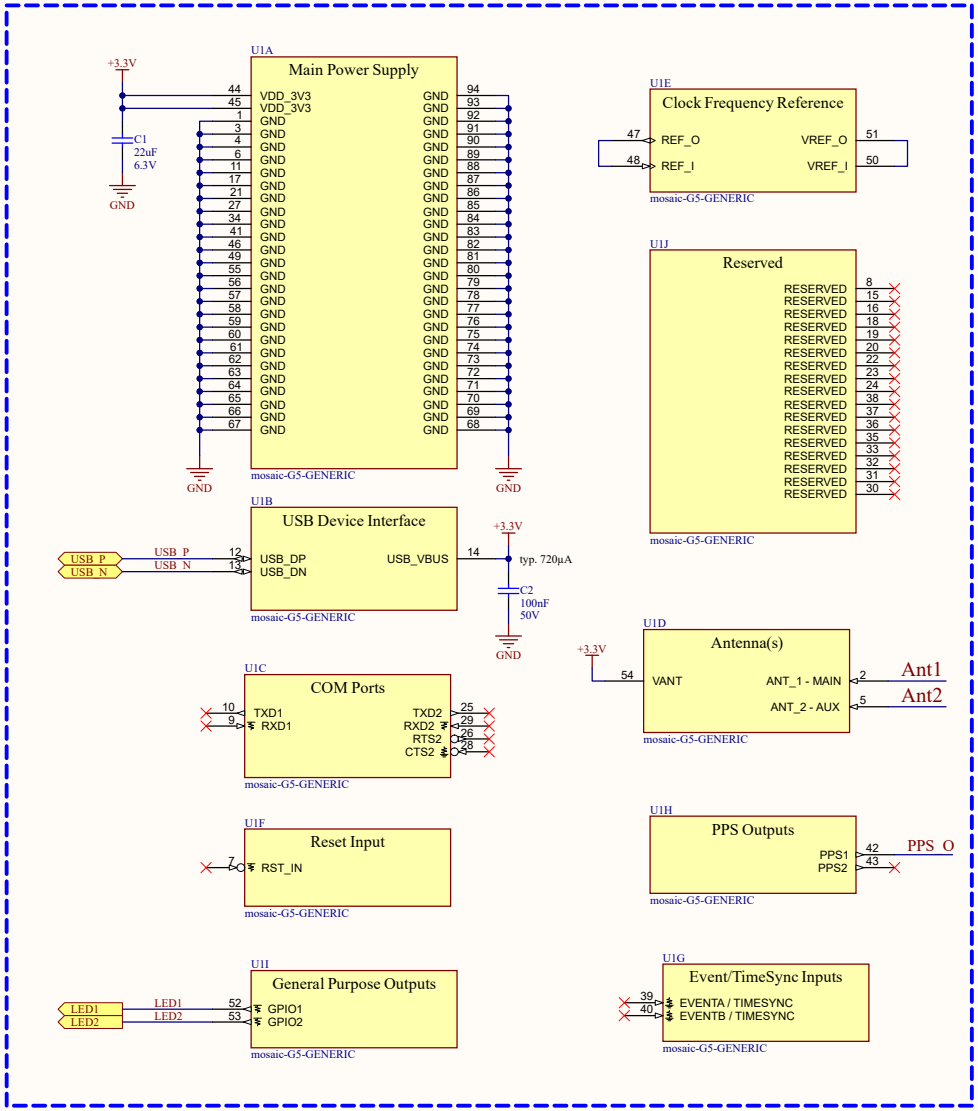

Antenna

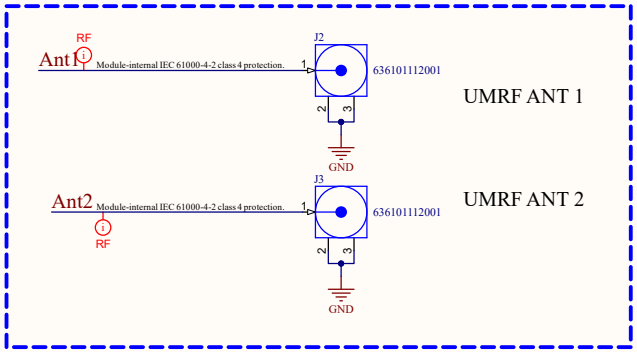

PPS

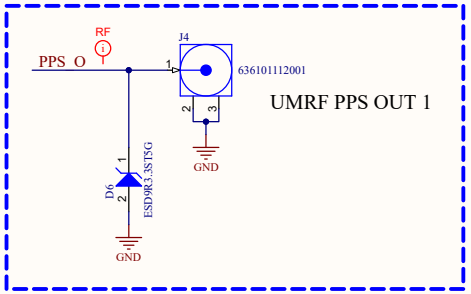

ANT_1 pre-amplification gain range:
- Single-antenna modules: 15-50 dB (AGC gain: 15-50dB)
- Dual-antenna modules: 15-35dB (AGC gain: 30-50dB)

ANT_2 pre-amplification gain range:
- 15-35 dB (i.e. AGC gain: 30-50dB)

Pre-amp gain[dB] = 65 - AGCgain[dB]

WARNING: max. pre-amplification gain: 35dB.

WARNING: ANT_1 and ANT_2 pre-amplification must not differ by more than 5dB. It is recommended to use the same antenna type for the main and auxiliary antennas, and, as much as possible, to use antenna cables of the same type and length.

APPROVALS		DATE
ENG:	E. Daporta	17.04.2025
DSN:	E. Daporta	23.04.2025
CHK:	V. Tratter	25.04.2025

PROJECT: G5Dot
VARIANT: Mosaic-G5 P3H
TITLE: Mosaic-G5

septentrio part of HEXAGON
Septentrio Interleuvenlaan 15i
3001 Leuven Belgium

SIZE	FILE NAME	FAB-REV	ASM-REV
A3	Mosaic-G5.SchDoc	01	01
SCALE n.a.	EXPORT DATE 15/04/2026	SHEET 3	OF 3